RJ45 Connector

14 - DNL

- RJ45 Connector with 100/1000 Base-T
- Integrated Magnetics
- Port: 1
- Dim: 25.4mm
- TAB-UP WO LEDs

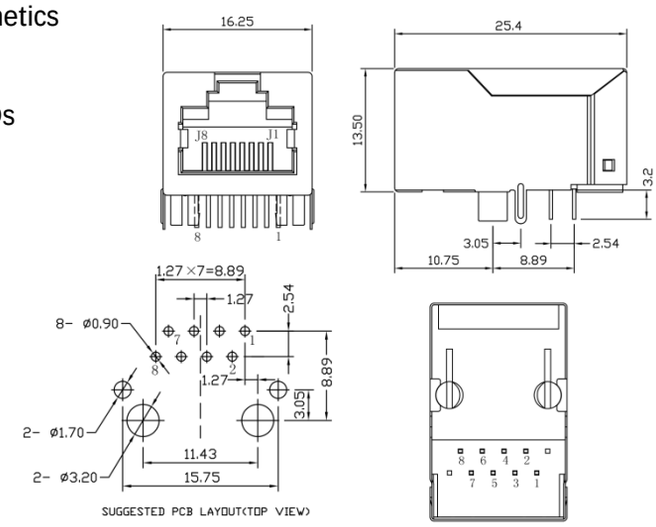

RJ45 Connector

1 - BENL

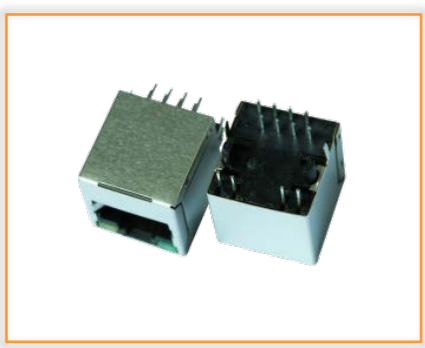

- RJ45 Connector with 10/100 Base-T
- Integrated Magnetics
- Port: 1
- Vertical RJ45 With LEDs

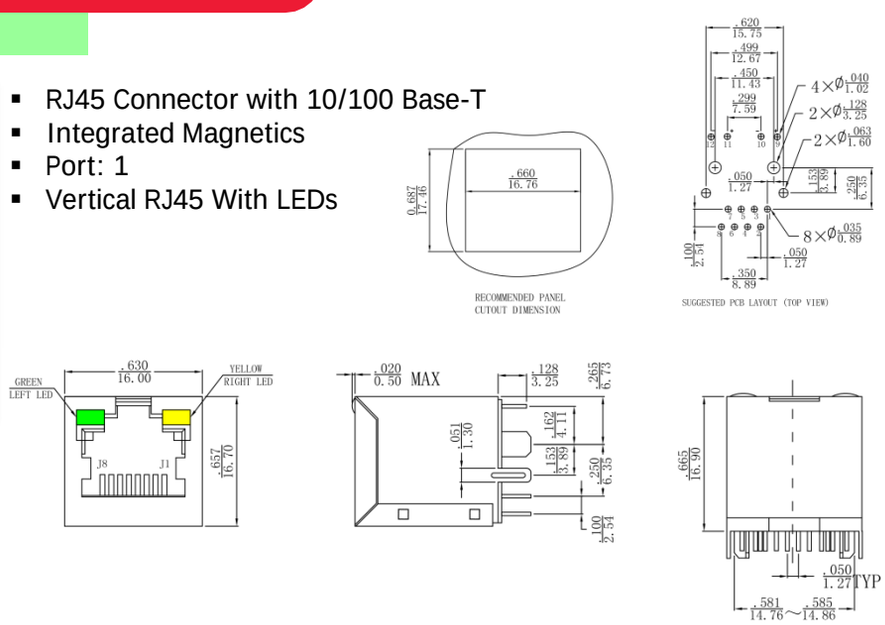

RJ45 Connector

110 – BENL
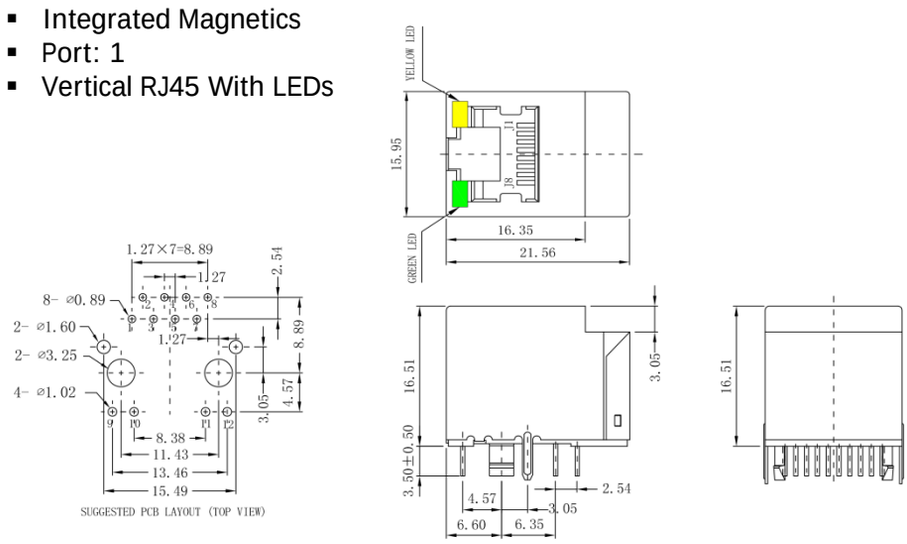
- RJ45 Connector with 100/1000 Base-T
- Integrated Magnetics
- Port: 1
- Vertical RJ45 With LEDs