REV.	DESCRIPTION	DRAWN	CHECKED	APPROVED
A	NEW RELEASE	LJH 07/08/07'		

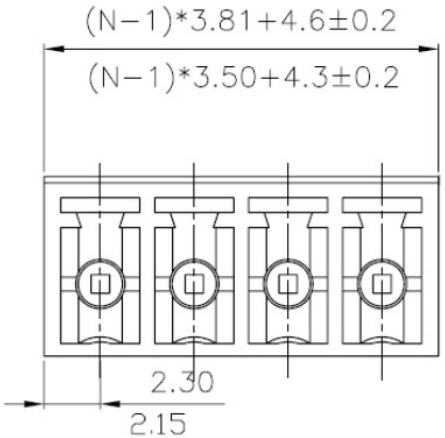

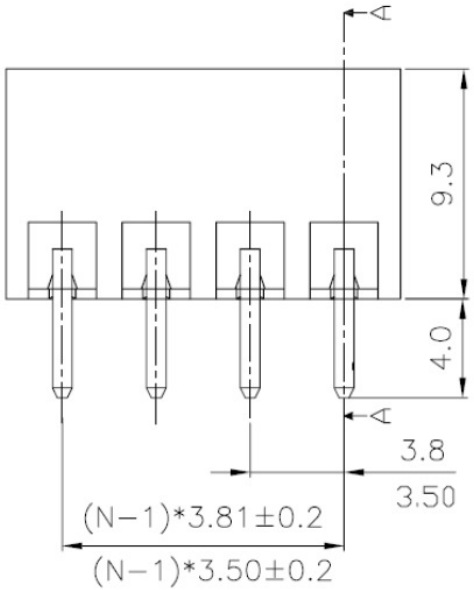

N:NUMBER OF CONTACTS

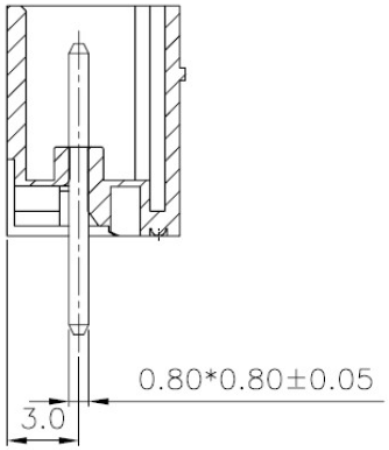

SECTION A−A

- MATERIAL
  PIN HEADER : BRASS, TIN PLATED
  HOUSING : PA66, UL94V−0
- ELECTRICAL
  RATED VOLTAGE : 300V
  RATED CURRENT : 8A
  CONTACT RESISTANCE : 20mΩ
  INSULATION RESISTANCE : 5000MΩ/1000V
  WITHSTANDING VOLTAGE : AC2000V/1Min
- MECHANICAL
  TEMP.RANGE : −40℃∽+130℃
  MAX SOLDERING : +250℃, FOR 5 SEC.

PRODUCT NUMBER CODE:

KF2EDG−3.5V/3.81V − X X

- P: POSITION
- No.OF CONTACTS 02 03 08 16
- SERIES No. F2EDG−3.5V/3.81V

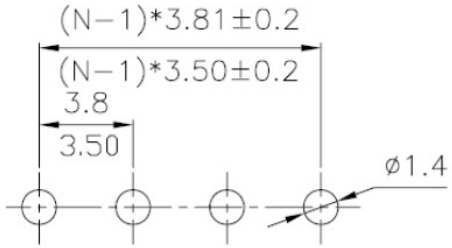

RECOMMEND PCB LAYOUT(TOLERANCE=±0.05)

GENERAL TOLERANCE		ANGLE TOLERANCE	
X.	±0.60	X.	±5°
.X	±0.38	.X	±3°
.XX	±0.25	.XX	±2°

DRAWING TYPE	CUSTOMER		
SCALE	1:1	SHEET	1 OF 1
DRAWING NO.	F2EDG−3.5V /3.81V		

PROJECTION		TITLE	PLUGGABLE TERMINAL BLOCKS PITCH3.50,3.81MM
UNITS	mm		
SHEET SIZE	A4	SERIES	KF2EDG−3.5V F2EDG−3.81V

TOPTEK
Toptek s.r.l. Via Turbada, 15/a - 23900 - Lecco
Tel. +39 0341 504 791 Fax. +39 0341 367 607
www.toptek-co.com