REV.	DESCRIPTION	DRAWN	CHECKED	APPROVED
A	NEW RELEASE	LJH 07/07/07'		

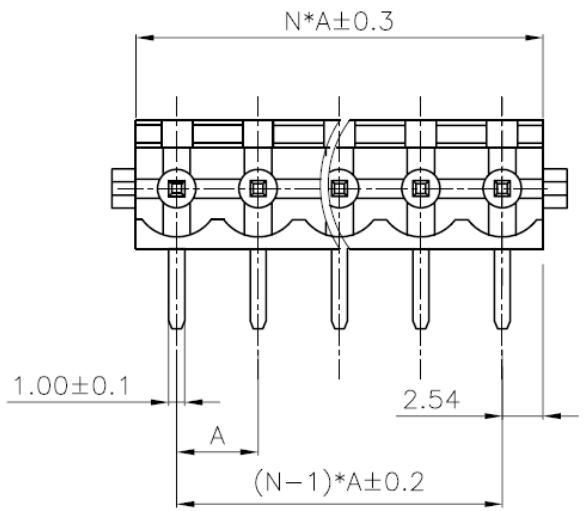

N:NUMBER OF CONTACTS

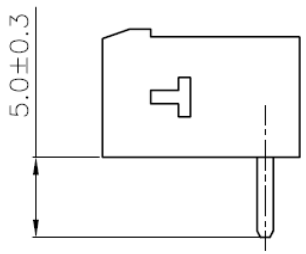

- MATERIAL
  PIN HEADER : BRASS, TIN PLATED
  HOUSING : PA66, UL94V−0
- ELECTRICAL
  RATED VOLTAGE : 300V
  RATED CURRENT : 12A
  CONTACT RESISTANCE : 20mΩ
  INSULATION RESISTANCE : 5000MΩ/1000V
  WITHSTANDING VOLTAGE : AC1500V/1Min
- MECHANICAL
  TEMP.RANGE : −40℃∽+105℃
  MAX SOLDERING : +250℃, FOR 5 SEC.

PRODUCT NUMBER CODE:

KF221R− X X

No.OF CONTACTS
02 03 04 05
06 07 08 16

PITCH5.00,5.08,7.50,7.62MM

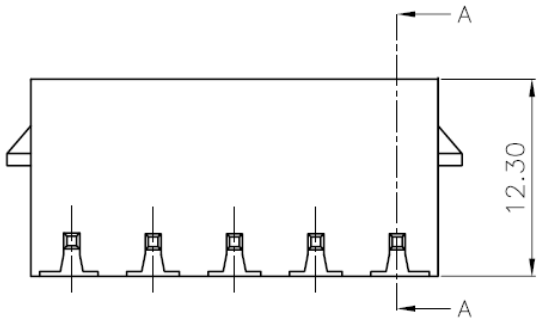

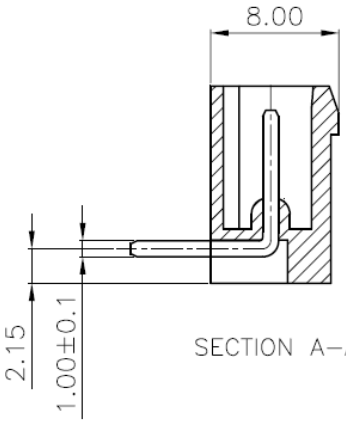

SECTION A−A

TYPE	Dimension
	A
1	5.00
2	5.08
3	7.50
4	7.62

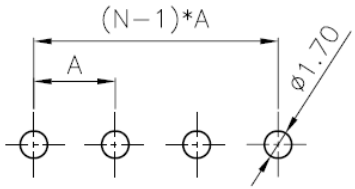

RECOMMEND PCB LAYOUT(TOLERANCE=±0.05)

GENERAL TOLERANCE		ANGLE TOLERANCE	
X.	±0.60	X.	±5°
.X	±0.38	.X	±3°
.XX	±0.25	.XX	±2°

DRAWING TYPE	CUSTOMER		
SCALE	1:1	SHEET	1 OF 1
DRAWING NO.	F221R−XXXXX		

PROJECTION		TITLE	PLUG−IN TERMINAL BLOCKS PITCH5.00,5.08,7.50,7.62MM
UNITS	mm		
SHEET SIZE	A4	SERIES	KF221R SERIES

TOPTEK

www.toptek-co.com