Housing Wafer Terminal

5.03mm Female & Male Terminal / Female & Male Housing

Specifications

Current Rating: 12A AC,DC
Voltage Rating: 250V AC,DC
Temperature Range: -25°C to +85°C
Contact Resistance: 10mΩ Max
Insulation Resistance: 1000MΩ Min
Withstanding Voltage: 1500V AC/minute
Material:Nylon 66,UL94V-2

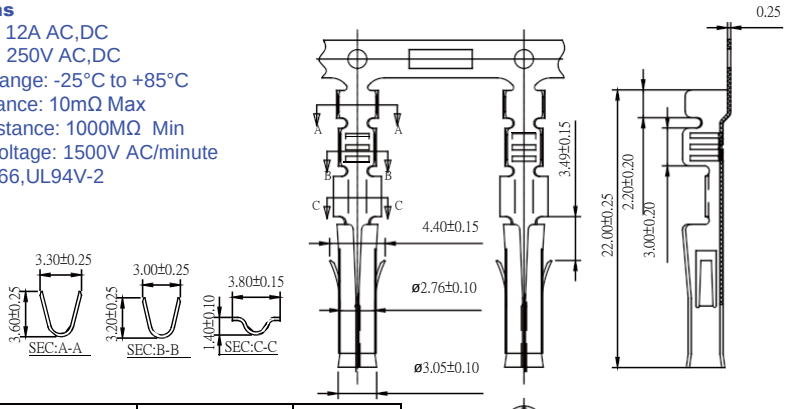

Wire Range	InsulaΘon O.D.	Material	Finish
#18-#24	3.10mm(Max)	Brass	Tin Plated

Part No.:5030-FT-L

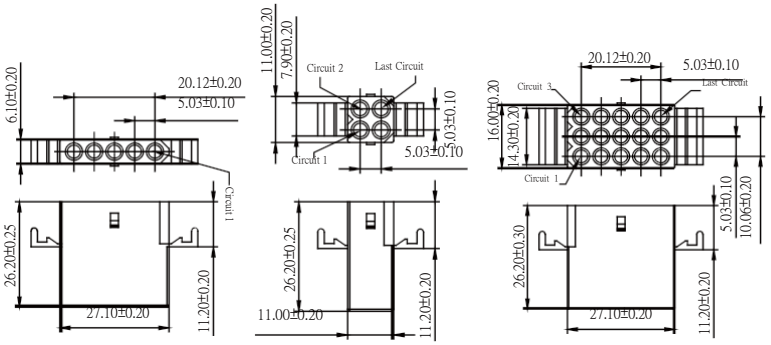

5030H-M105W1-L
5030H-M105W2-L

5030H-M202W1-L
5030H-M202W2-L

5030H-M305W1-L
5030H-M305W2-L

Part No.	No. of Contacts
5030H-M101W-L	1x1
5030H-M102W-L	1x2
5030H-M103W-L	1x3
5030H-M104W-L	1x4
5030H-M105W-L	1x5
5030H-M202W-L	2x2
5030H-M302W-L	3x2
5030H-M303W-L	3x3
5030H-M304W-L	3x4
5030H-M305W-L	3x5

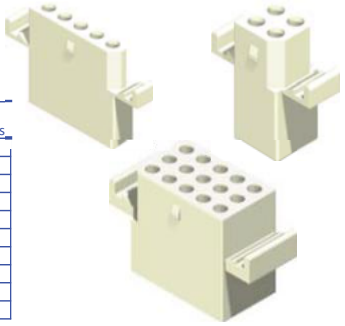

Part No.:5030H-MXXXW__-L

1:With Ear
2:W/O Ear

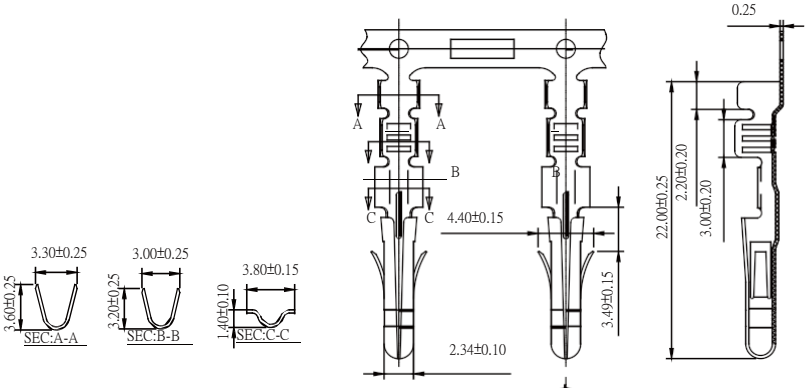

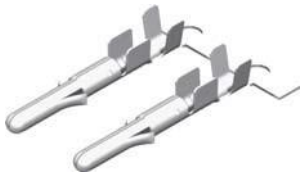

Wire Range	InsulaΘon O.D.	Material	Finish
#18-#24	3.10mm(Max)	Brass	Tin Plated

Part No.:5030-MT-L

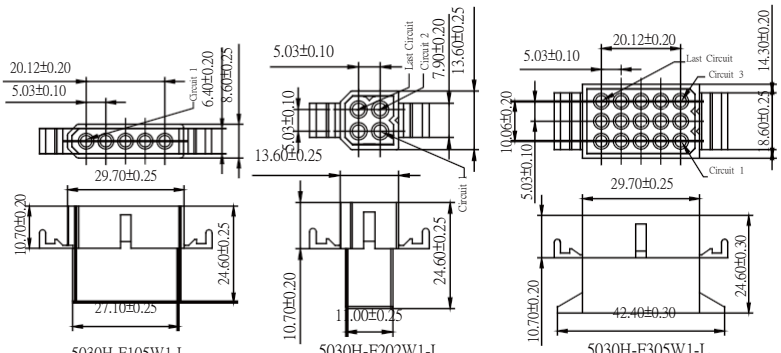

5030H-F105W1-L
5030H-F105W2-L

5030H-F202W1-L
5030H-F202W2-L

5030H-F305W1-L
5030H-F305W2-L

Part No.	No. of Contacts
5030H-F101W-L	1x1
5030H-F102W-L	1x2
5030H-F103W-L	1x3
5030H-F104W-L	1x4
5030H-F105W-L	1x5
5030H-F202W-L	2x2
5030H-F302W-L	3x2
5030H-F303W-L	3x3
5030H-F304W-L	3x4
5030H-F305W-L	3x5

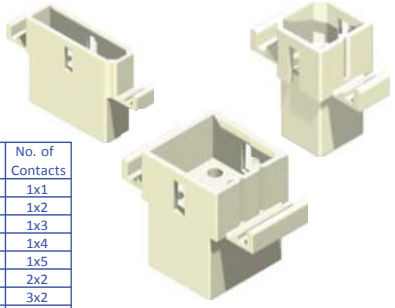

Part No.:5030H-FXXXW__-L

1:With Ear
2:W/O Ear