TOPTEK®
HARDWARE ELECTRONIC MANUFACTURER
www.toptek-co.com

- MATERIAL:NYLON 66 (UL)
- FLAME CLASS:94V-2/94V-0
- COLOR:BLACK
- UNIT:mm

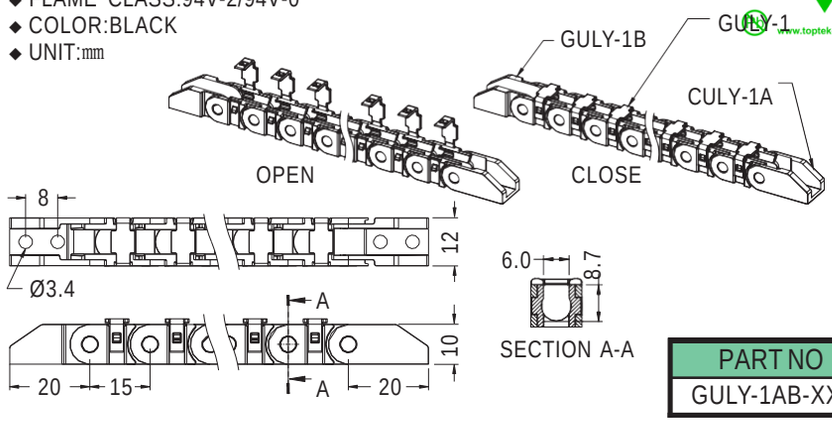

PART NO
GULY-1AB-XXF

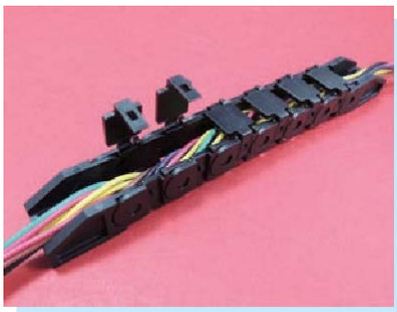

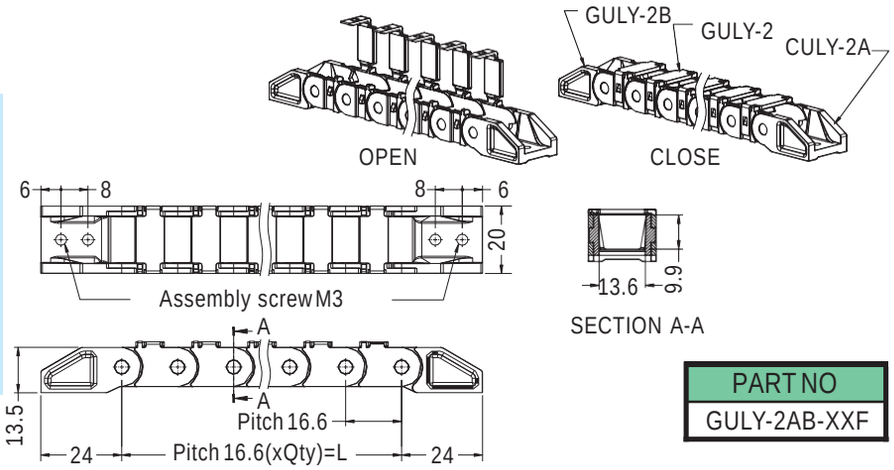

PART NO
GULY-2AB-XXF

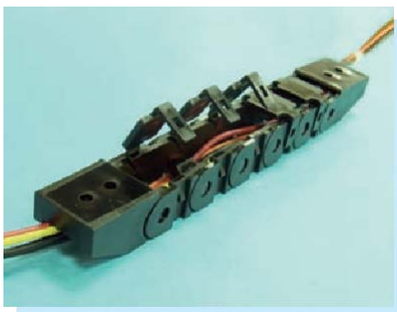

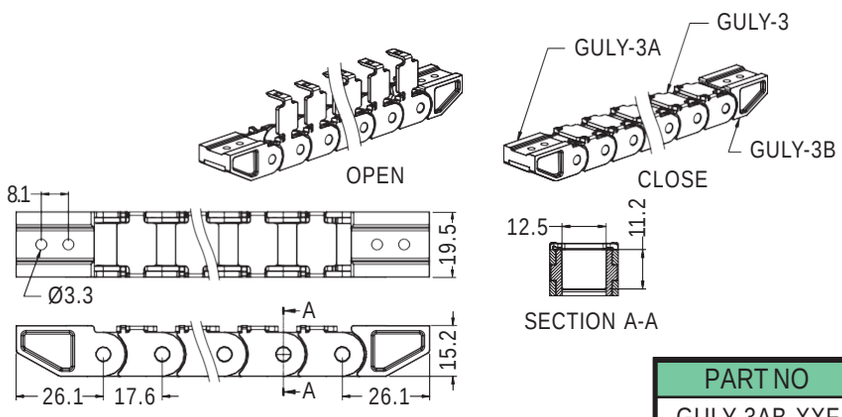

PART NO
GULY-3AB-XXF

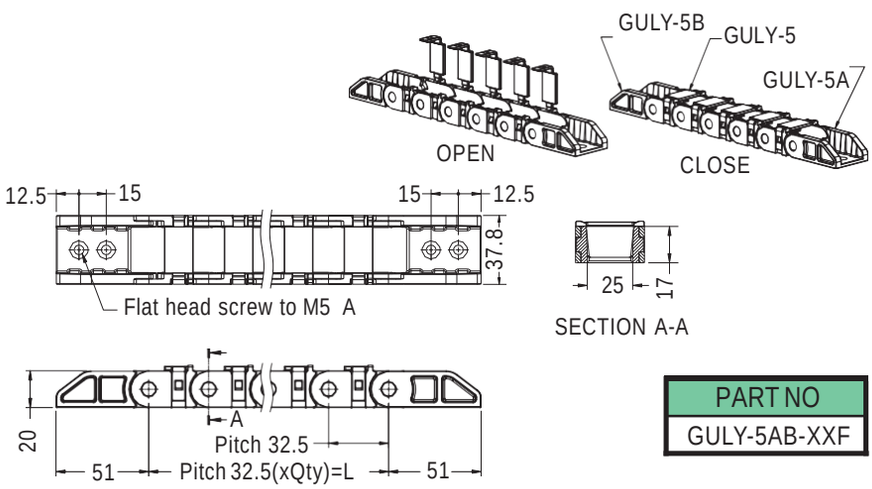

PART NO
GULY-5AB-XXF

RoHS 2002/95/EC